GREANEY
Quality Precast Concrete

0.6m x 0.6m x 0.6m Lego Block (with holes)

Greaney Concrete Products Ltd,
Stokesfield, Shanagolden, Co. Limerick, Ireland

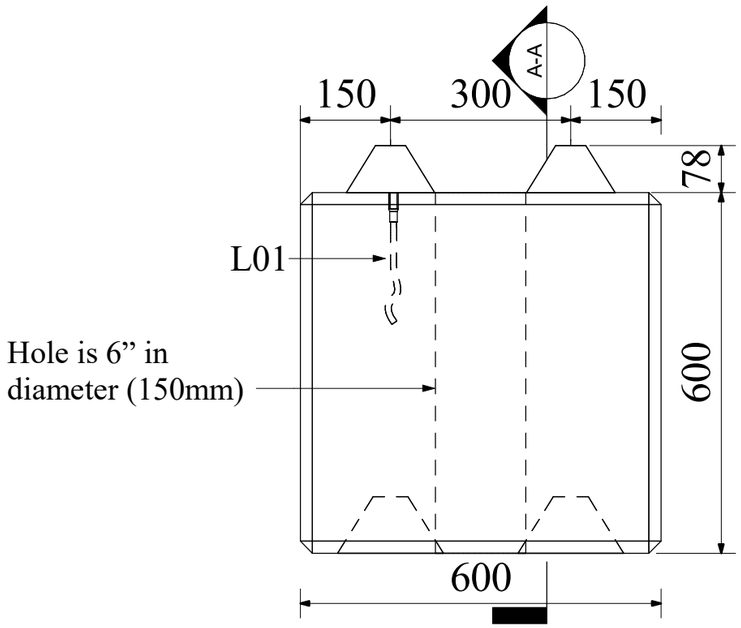

FRONT VIEW
1 : 10

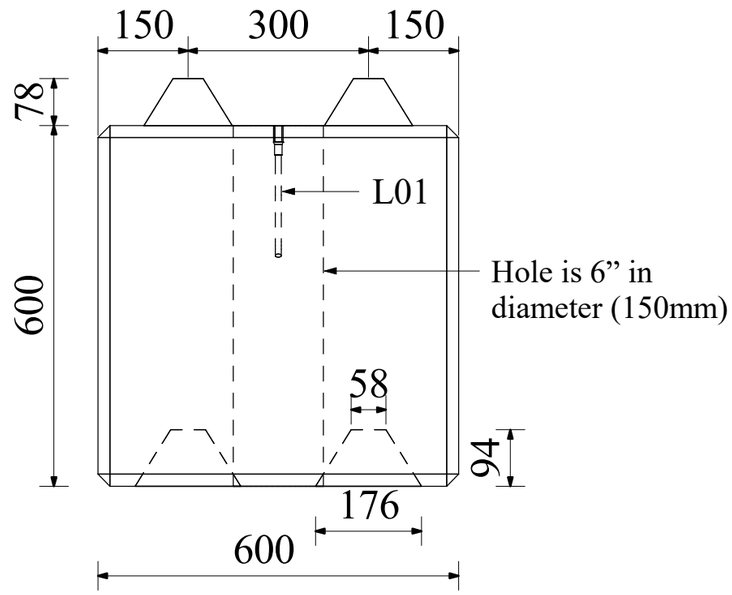

A - A
1 : 10

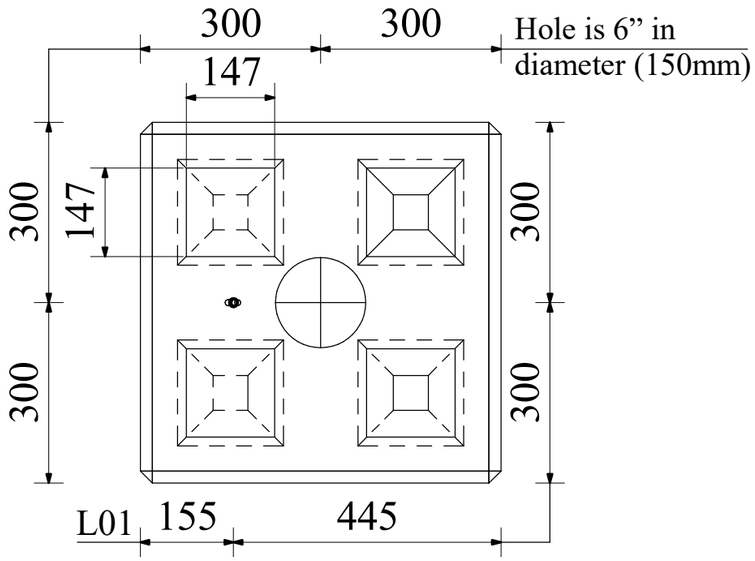

TOP VIEW
1 : 10

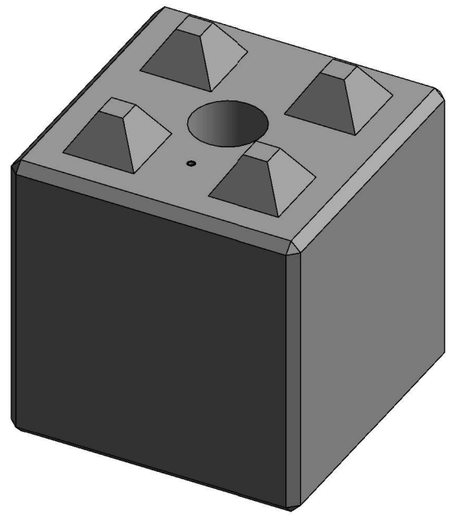

3D VIEW

Note:
All Greaney Concrete Lego Block units are cast with min. C32/40 concrete, of which casting occurs in a monolithic one cast completion.

PRODUCT CODE	-		LEGEND		ITEM NO.	CAST IN PARTS	QTY
QUANTITY	1	Nos.	m/	MOULD FACE	L01	Cast in treaded RD16 m16	1
CONCRETE MIX	-		n/	NEAR FACE			
MIX - VOLUME	0.208	M³					
WEIGHT	0.5	Tons					
Fcu @ 28 DAYS	-	Mpa					
Fcu @ DEMOULDING	-	Mpa					
CONCRETE COVER	-	mm					
STEEL GRADE	-	Mpa					

REV. NO.	REVISION DESCRIPTION	DRAWN	DATE	APPROVED
0	ISSUE FOR APPROVAL	SPK	08-03-24	A.M

Tel : + 353 069 65388
E.Mail : info@greaneyconcrete.ie
Web : www. greaneyconcrete.ie

PROJECT:			
Lego Block			
DRAWING TITLE: 0.6m x 0.6 x 0.6m Lego Block (with holes)			
DRAWN: SPK	CHECKED: -	DESIGNED: -	APPROVED: -
SCALE: 1:10	DRAWING NO. -	REV. MARK 0	Page. No. 1/1